USER MANUAL

Model AD85X AD90X

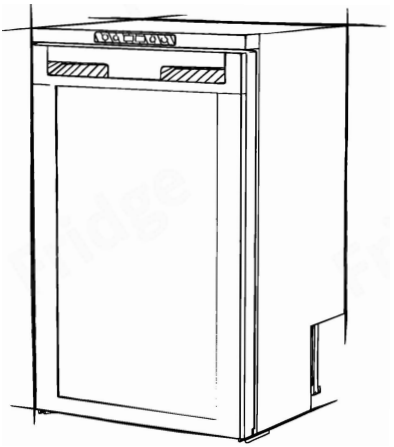

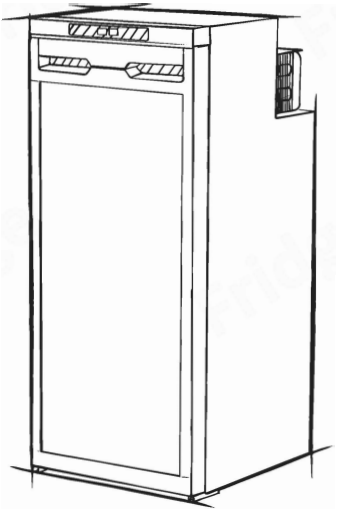

CONTENTS

CONTENTS

SAFETY INSTRUCTIONS Page1

PRODUCT FEATURES Page3

PRODUCT STRUCTURE Page3

INSTALLATION INSTRUCTIONS Page4

REVERSE DOOR OPEN DIRECTION Page7

FUNCTION AND OPERATION Page7

CARE AND MAINTENANCE Page9

TROUBLESHOOTING Page10

WARRANTY Page11

TECHNICAL INFORMATION Page11

1.SAFETY INSTRUCTIONS

WARNING!

- Do not operate the appliance if it is visibly damaged.
- Do not block the gaps of the fridge with things like pin, wire, etc.
- Do not expose the appliance to rain or soak it in water.
- Do not place the appliance near naked flames or other heat sources (heaters, direct sunlight, gas ovens etc.)
- Do not store explosive substances such as aerosol cans with a flammable propellant in this appliance.
- Ensure the supply cord is dry and not trapped or damaged.
- Check the voltage specification on the type plate corresponds to that of the energy supply. The appliance is only to be used with the power supply unit provided with the appliance.
- Do not use electrical appliances inside the food storage compartments of the appliance, unless they are of the type recommended by the manufacturer.
- Once unpacked and before turning on, the appliance must be placed on a level surface for more than 6 hours.
- Make sure that the appliance stays horizontally when it is running. The tilt angle must be less than 5° for long time running and be less than 45° for short time running.
- Keep ventilation openings, in the appliance enclosure or in the built-in structure, clear of obstruction.
- Keep the appliance stable on the ground or in the car; Do not drain upside down.
- When positioning the appliance, ensure the supply cord is not trapped or damaged.
- Do not locate multiple portable socket-outlets or portable power supplies at the rear of the appliance.
- Risk of child entrapment. Before you throw away your old refrigerator or freezer:

* Take off the doors.
* Leave the shelves in place so that children may not easily climb inside.
* Please keep the products away from the fire or similar glowing substance before you dispose the refrigerator.

- Do not use mechanical devices or other means to accelerate the defrosting process, other than those recommended by the manufacturer.
-  : Risk of fire/ flammable materials.

CAUTION!

- Repairs may only be carried out by qualified personnel. Incorrect repair may cause danger. The lamp and supply cord must be replaced by the manufacturer or qualified persons.
- The installation of DC power in the boat must be handled by qualified electricians.
- Children should be supervised to ensure that they do not play with the appliance.

- This appliance is not intended for use by persons (including children) with reduced physical, sensory or mental capabilities, or lack of experience and knowledge, unless they have been given supervision or instruction concerning use of the appliance by a person responsible for their safety.

NOTICE!

- Suitable for camping use.
- Disconnect the power supply before each cleaning and maintenance and after every use.
- Do not use sharp tools to defrost; Do not damage the refrigerant circuit.
- Check if the cooling capacity of the appliance is suitable for storing the food or medicine. Food may only be stored in its original packaging or in suitable containers.
- The appliance is intended to be used in household and similar applications such as:
  - Staff kitchen areas in shops, offices and other working environments;
  - Camping, Farm houses and by clients in hotels, motels and other residential environments;
  - Bed and breakfast type environments;
  - Catering and similar non-retail applications.
- To avoid contamination of drink, please respect the following instructions:
  - Opening the door for long periods can cause a significant increase of the temperature in the compartments of the appliance.
  - Clean regularly surfaces that can come in contact with drink and accessible drainage systems.
  - Store raw meat and fish in suitable containers in the refrigerator, so that it is not in contact with or drip onto other food;
  - If the refrigerating appliance is left empty for long periods, switch off, defrost, clean, dry, and leave the door open to prevent mould developing within the appliance.



Please according to local regulations regarding disposal of the appliance for its flammable refrigerant and blowing gas.

2.PRODUCT FEATURES

- High-efficiency DC compressor and conversion module.
- CFC free and great heat insulation.
- Intelligent battery protection system prevents your vehicle from running out of battery.
- LED display control panel for temperature setting. Dual compartments with individual temperature control.
- Easy to install, reversible refrigerator door.
- Detailed designs: removable door bins, crisper drawer, removable wire shelves, interior LED light, night light for control panel.

3.PRODUCT STRUCTURE

Model: AD85X

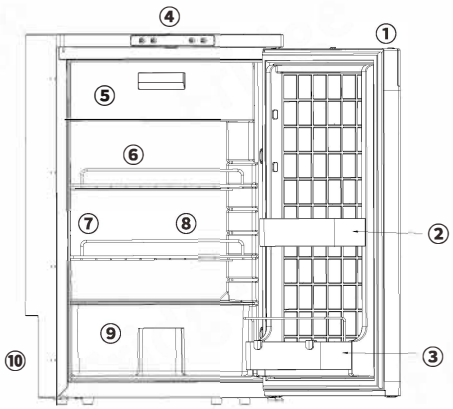

①Door latch
②③Door bins
④Control panel
⑤Freezer Compartment
⑥Fridge Compartment

Model: AD90X

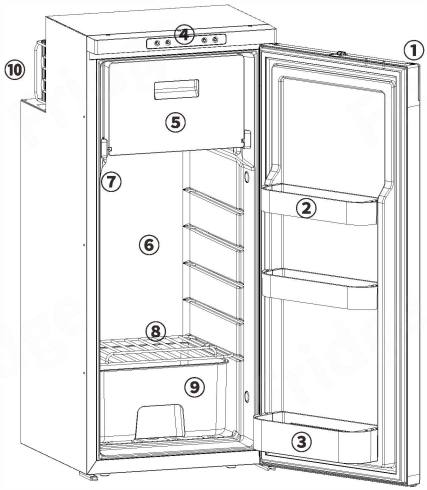

⑦Interior LED light
⑧Shelves
⑨Crisper drawer
⑩Compressor

4.INSTALLATION INSTRUCTIONS

Precautions before installation: Ensure that the fridge is not damaged when opening the package after receiving the product. Any transportation damage could be reported to the place of purchase. Handle the product with the utmost care and attention.

STEP 1: Prepare the cabinet. Leave space around the refrigerator to keep good ventilation. Always keep the fridge on a horizontal surface and away from heat sources.

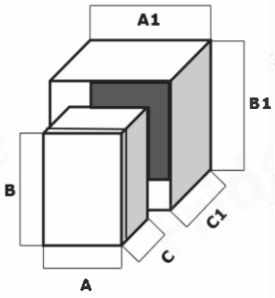

Model	Product Dimension (A*C*B)	Installation Frame Dimension (optional)	Recommended Installation Dimension (A1*B1*C1 inner size)
AD85X	485*453*790mm	Version A: 525*790mm (Interior size) 580*817mm (Exterior size) Version B: 490*790mm (Interior size) 524*794mm (Exterior size)	530*488*800mm (with installation frame A) 495*488*800mm (with installation frame B) (without installation frame)
AD90X	418*468*976mm	Version A: 461*962mm (Interior size) 503*984mm (Exterior size) Version B: 425*962mm (Interior size) 459*979mm (Exterior size)	463*503*986mm (with installation frame A) 428*503*986mm (with installation frame B) (without installation frame)

* Note: Recommended installation dimensions are for reference only, please refer to the actual product for specific dimensions.

STEP 2: Connect to a power supply. Connect the refrigerator to the vehicle 12/24V DC system directly (*Note: The plug and power-supply cord are not included in the standard configuration). Do not locate multiple portable socket-outlets or power supplies at the rear of the device.

STEP 3: Push the fridge into the cabinet carefully to avoid scratching the floor, and the power cable should be kept loosen.

STEP 4: Fix the refrigerator. There are three methods you can choose:

——**Method 1:** Mount the fridge with the cabinet wall (e.g.,CR85X-S). The screw holders ①② ③④ is built in the side wall of the refrigerator, a hole needs to be drilled through the screw holders into the side metal panel with **screws (M5, 15mm minimal)** and fix it on the wall; after that, use the screw cover to cover the hole. (If the refrigerator needs to be drilled through, it should be confirmed before leaving the factory. The screws are not included with the refrigerator.)

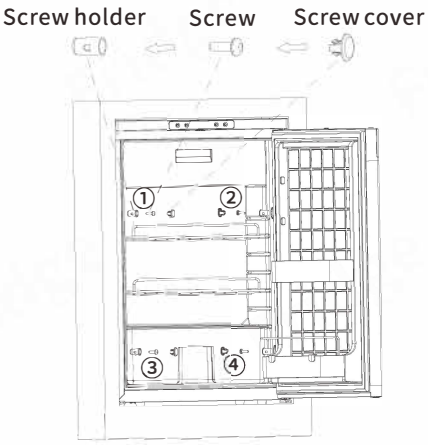

EXAMPLE-1 Mount to the cabinet wall

——**Method 2: Optional** installation frame A (Surface mount installation or Flush mount installation) for a secure fit and a smart finish as shown below

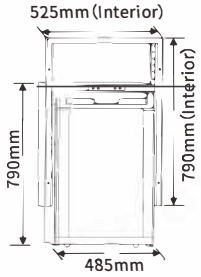

Unscrew the screws on the refrigerator and place the frame behind the door to fix it.

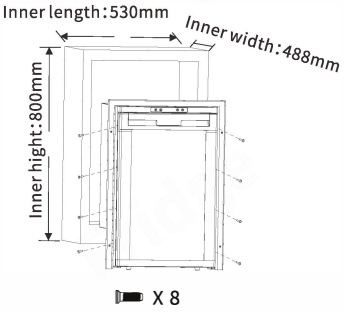

Fix the frame to the refrigerator with screws and then push the refrigerator into the cabinet.

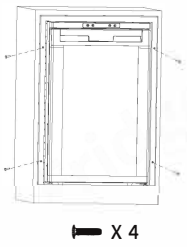

Fix the refrigerator to the cabinet through the frame.

EXAMPLE-2 Surface mount installation

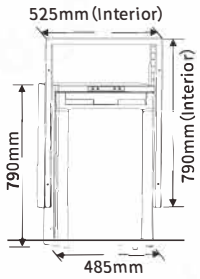

Unscrew the screws on the refrigerator and fix the frame flush with the door.

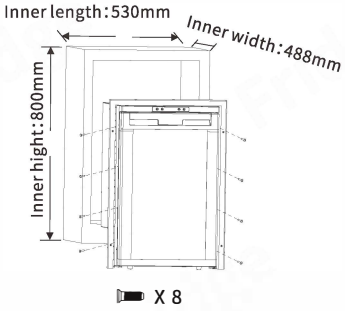

Fix the frame to the refrigerator with screws and then push the refrigerator into the cabinet.

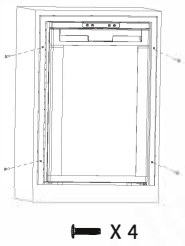

Fix the refrigerator to the cabinet through the frame.

EXAMPLE-3 Flush mount installation

——**Method 3:** Optional installation frame version B (Surface mount installation) for a secure fit and a smart finish as shown below

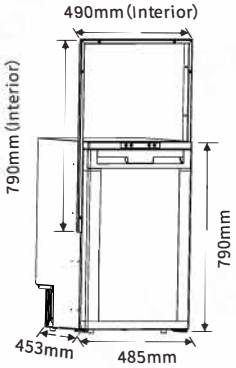

Unscrew the screws on the refrigerator and place the frame behind the door to fix it.

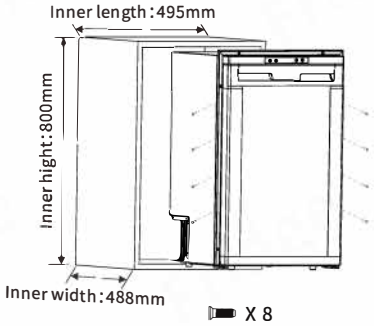

Fix the frame to the refrigerator with screws and then push the refrigerator into the cabinet.

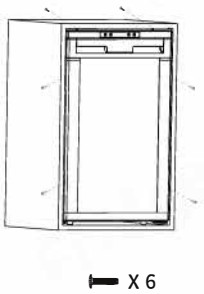

Fix the refrigerator to the cabinet through the frame.

EXAMPLE-4 Surface mount installation

STEP 5: Verify the installation. Once the installation had been finished, check the continuity of the earth circuit and carry out all electrical safety testing provided for by current regulations. Protect and fix the cables in order to prevent accidental pulling of the cable from disconnecting it from the connections or coming into contact with hot parts with a temperature above 50° C or with sharp parts.

5.REVERSE DOOR OPEN DIRECTION

Reversible door that can be opened from left to right or from right to left. Follow the steps below if necessary :

1.Unscrew the bottom hinge and take off the door body (keep the fridge stable);

2.Move the top and bottom door axle to the other side, and install the door to the refrigerator; fasten the top and bottom door axles with the top and bottom hinges; screw the door with the hinges, the door opening direction is now reversed.

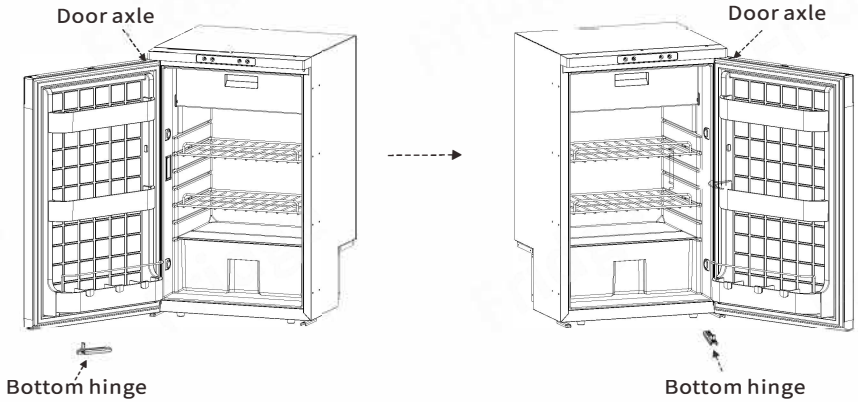

6.FUNCTION AND OPERATION

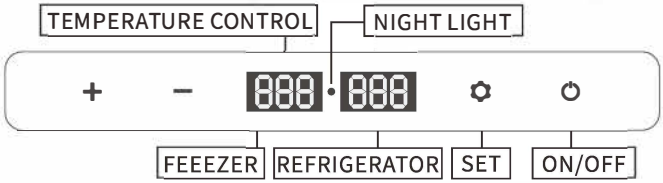

• **Power Supply:** connect to DC 12V/24V.(*With the optional rear cover, it can be connected to a 100-240V AC power supply using the dedicated adapter.)

• **Display Screen Initialization:** when the fridge is powered on, the buzzer will make a long beep, and the display will be on for one second then enter the normal operation.

• **Power ON/OFF:** press ⏻ to switch ON/OFF.

• **Night mode:** under running state, long press ⏻ for 2 seconds to enter Night mode, the screen will turn off and the night light will be on. Short press ⏻ again to return to normal display.

• **Temperature Setting**: when both freezer and fridge compartments are set in running state, press + or — to enter freezer temperature setting, press + or — again to adjust the freezer temperature, long press + or — to quickly adjust the temperature. Press + or — to enter freezer temperature setting, the screen flashes, then press ⚙ to switch the freezer and fridge temperature setting. The temperature displayed is the current temperature of the compartment, it will take a while to reach the set temperature.
The range of temperature adjust: fridge: 0~8°C (32~46°F); freezer: -20~20°C (-4~68°F).

Note: under the running state, long press + and ⚙ at the same time for three seconds to switch ON/OFF the freezer compartment, long press — and ⚙ at the same time for three seconds to switch ON/OFF the refrigerator compartment, two compartments cannot be switched OFF at the same time.

• **Cooling Mode**: under the running state, press ⚙ to switch HH(fast cooling) and ECO (Energy saving Mode). (*Factory setting is HH.)

• **Battery Protection Mode**: under the running state, long press ⚙ for 3 seconds until the left screen flashes, then press ⚙ again to switch High, Medium and Low (*Factory setting is High).



From left to right: Low/Medium/High.

Voltage reference:

INPUT / MODE	DC 12V		DC 24V	
	CUT OUT	CUT IN	CUT OUT	CUT IN
L	8.5V	10.9V	21.3V	22.7V
M	10.1V	11.4V	22.3V	23.7V
H	11.1V	12.4V	24.3V	25.7V

* the voltage is theoretical value, there may be a deviation in different sceneries.
* H should be set when the product is connected to car power, and M or L should be set when it is connected to a portable battery or other back-up battery.

• **Temperature Unit Setting**: switch OFF the fridge, long press ⚙ for 3 seconds until displays E1, and switch to E5 by pressing ⚙ again, then press + or — to switch Celsius or Fahrenheit. (*Factory setting is °C.)

• **Reset**: switch OFF the fridge, long press ⚙ for 3 seconds until displays E1, under E1 mode, long press + — at the same time for seconds to reset the settings.

• **Food Storage Guideline:**

								
Drinks	Juice	Fruits	Vegetables	Prepared foods	Wine	Ice cream	Seafood	Meat /Frozen food
5°C/41°F	8~10°C/ 46~50°F	5~8°C/ 41~46°F	3~10°C/ 37~50°F	4°C/39°F	13°C/55°F	-10°C/14°F	-3°C/26°F	-18°C/0°F

*Food should be placed in sealed containers or packaging before refrigeration.

7.CARE AND MAINTENANCE

■Cleaning:

- Unplug the device first to avoid electric shock.
- Use wet cloth to clean the device and dry it.
- Remove the cover and drain from the hole at the bottom of the device.
- Do not soak the device in water and do not wash it directly.
- Do not use abrasive cleaning agents as these can damage the device.

■Storage:

If the device will not be in use for a long time, please follow the steps:

- Turn off the power and remove the plug.
- Remove all the items stored in the device.
- Remove the cover and drain from the hole, wipe off excess water with a soft rag.
- Put the device in a cool and dry place.

■Defrosting:

Humidity can form frost in the interior of the cooling device or on the evaporator, which will affect the cooling performance. Defrost the device regularly to avoid this.

- Switch off the device.
- Take out the contents of the device.
- Remove the cover and drain from the hole.
- Keep the door open.
- Wipe off the defrosted water.

Never use hard or sharp tools to remove ice or to loosen objects which have frozen in place.

8.TROUBLESHOOTING

Issues	Cause/Suggestions
Refrigerator does not work	• Check if the switch is on. • Check if the plug and socket are connected well. • Check if the fuse has been burnt. • Check if the power supply is malfunctioned. • Switch on/off the fridge frequently may cause start delay of the compressor.
Refrigerator compartments are too warm	• The door is opened frequently. • A large amount of warm or hot food was stored recently. • The refrigerator has been disconnected for a long time.
Food is frozen	• The temperature was set too low.
There is "water flow" noise from inside the refrigerator	• It's a normal phenomenon, caused by the flow of refrigerant.
There are waterdrops around the refrigerator casing or door gap	• It's a normal phenomenon, the moisture will condense to water when it touches a cold surface of the refrigerator.
The compressor is slightly noisy when starting	• It's a normal phenomenon, the noise will be reduced after the compressor works stably.
Code F1 displayed	• Possible cause: low voltage to fridge. Adjust the battery protection from High to Medium or from Medium to Low.
Code F2 displayed	• Possible cause: condenser fan is overloaded. Disconnect power to fridge for 5 minutes & re-start. If the code shows again, contact manufacturer for service.
Code F3 displayed	• Possible cause: the compressor starts too frequently. Disconnect power to fridge for 5 minutes & re-start. If the code shows again, contact manufacturer for service.
Code F4 displayed	• Possible cause: compressor not kicking in. Disconnect power to fridge for 5 minutes & re-start. If the code shows again, contact manufacturer for service.
Code F5 displayed	• Possible cause: overheating of the compressor & electronics. Disconnect power to fridge for 5 minutes & re-start. If the code shows again, contact manufacturer for service.
Code F6 displayed	• Possible cause: no parameter can be detected by the controller. Disconnect power to fridge for 5 minutes & re-start. If the code shows again, contact manufacturer for service.
Code F7 or F8 displayed	• Possible cause: temperature sensor is faulty. Contact manufacturer for service.

9.WARRANTY

If the device gets malfunctional, limited warranty will be provided for 1 year from the date of purchase,except following situations:

- Contrived damage.
- Damage caused by force majeure such as earthquake, conflagration, etc.
- Damage from inappropriate use or violating this instruction.
- Damage or malfunction caused by disassembling.

10.TECHNICAL INFORMATION

MODEL	**ADBSX**	**AD90X**
RATED VOLTAGE	DC12/24V or AC100~240V (using dedicated adapter, optional for rear cover type)	
RATED POWER	80W	
TOTAL CAPACITY	83.2L/2.9Cu.Ft.	92.9L/3.2Cu.Ft.
FRIDGE COMPARTMENT CAPACITY	74.6L/2.6Cu.Ft.	83.2L/2.9Cu.Ft.
FREEZER COMPARTMENT CAPACITY	8.6L/0.30Cu.Ft.	9.7L/0.3Cu.Ft.
NOISE	≤45dB	
TEMPERATURE SETTING RANGE	Refrigeration: 0~8°C (32~46°F) Freezer: -20~20°C (-4~68°F)	
CLIMATE CATEGORY	T/ST/N	
DIMENSIONS (L*W*H)	485*453*790mm 19 1/16*17 13/16*31 3/32 inch	418*468*976mm 16 7/16*18 7/16*38 3/8 inch
NET WEIGHT	26kg/57.3lb	22.3kg/49.1lb

*Due to product improvement, the technical information might be different from actual information, please refer to the rating label on the product.